CHOPPER BUILDERS HANDBOOK

© 2001–12 G.W. WEISHAUPT, ALL RIGHTS RESERVED.

BILL OF MATERIALS

MARK	ITEM DESCRIPTION	ITEM SPECIFICATIONS
1	FRAME BASE TRANSVERSE CROSSMEMBER	2x2x3/16"XWALL SQ. STL. TUBING – CUT TWO PIECES 18" LONG
2	FRAME BASE SIDE MEMBERS	2x2x3/16" WALL SQ. STL. TUBING – CUT TWO PIECES 20" LONG
3	RAM PIVOT PLATE RUNNER TUBE	2x2x3/16" WALL SQ. STL. TUBING – CUT ONE PIECE 14" LONG
4	RISER TUBE CROSSMEMBER	2x2x3/16" WALL SQ. STL. TUBIN – CUT ONE PIECE 4" LONG
5	FRAME RISER TUBES	2x2x3/16" WALL SQ. STL. TUBING – CUT TWO PIECES 36" LONG
6	DIAGONAL FRAME BRACES	2x2x3/16" WALL SQ. STL. TUBING – CUT TWO PIECES 32" LONG
7	DIE PIVOT PIN PLATES	2x4x3/4" CRS – CUT TWO PIECES 2"x4"
8	RISER TUBE REINF. CAP GUSSETTS	2"x3/8" CR STEEL PLATE – CUT TWO PIECES PER PLANS
9	RAM MOUNT PIVOT PIN PLATES	2"x3/8" CR STEEL PLATE – CUT TWO PIECES 2"X4"
10	BENDER DRIVE LINK ARMS	2"x1/2" CRS PLATE – CUT TWO PIECES 2"X13" PER PLANS
11	DRIVE LINK RAM PIVOT PLATES	2"x1/2" CRS PLATE – CUT TWO PIECES 2"X13" PER PLANS
12	RAM MOUNTING BOLT	5/8–11 GRADE–8 BOLT 4" LONG (SUPPLY WITH 2 WASHERS)
13	RAM ARM PIVOT PIN	5/8"x4" HIGH–STRENGTH STL. CINCH PIN
14	DIE PIVOT PIN	1"x8" HIGH–STRENGTH STL. CINCH PIN
15	FOLLOW BAR PIVOT PIN	7/8"x8" HIGH–STRENGTH STL. CINCH PIN
16	DIE DRIVE PIN	7/8"x4" HIGH–STRENGTH STL. CINCH PIN

NOTE THAT THE DIE ASSEMBLY WHICH INCLUDES THE MAIN DIE, FOLLOW BAR, U–STRAP AND STRAP PIN ARE TO BE PURCHASED FROM JD2. USE MODEL–3 DIES AND ACCESSORIES.

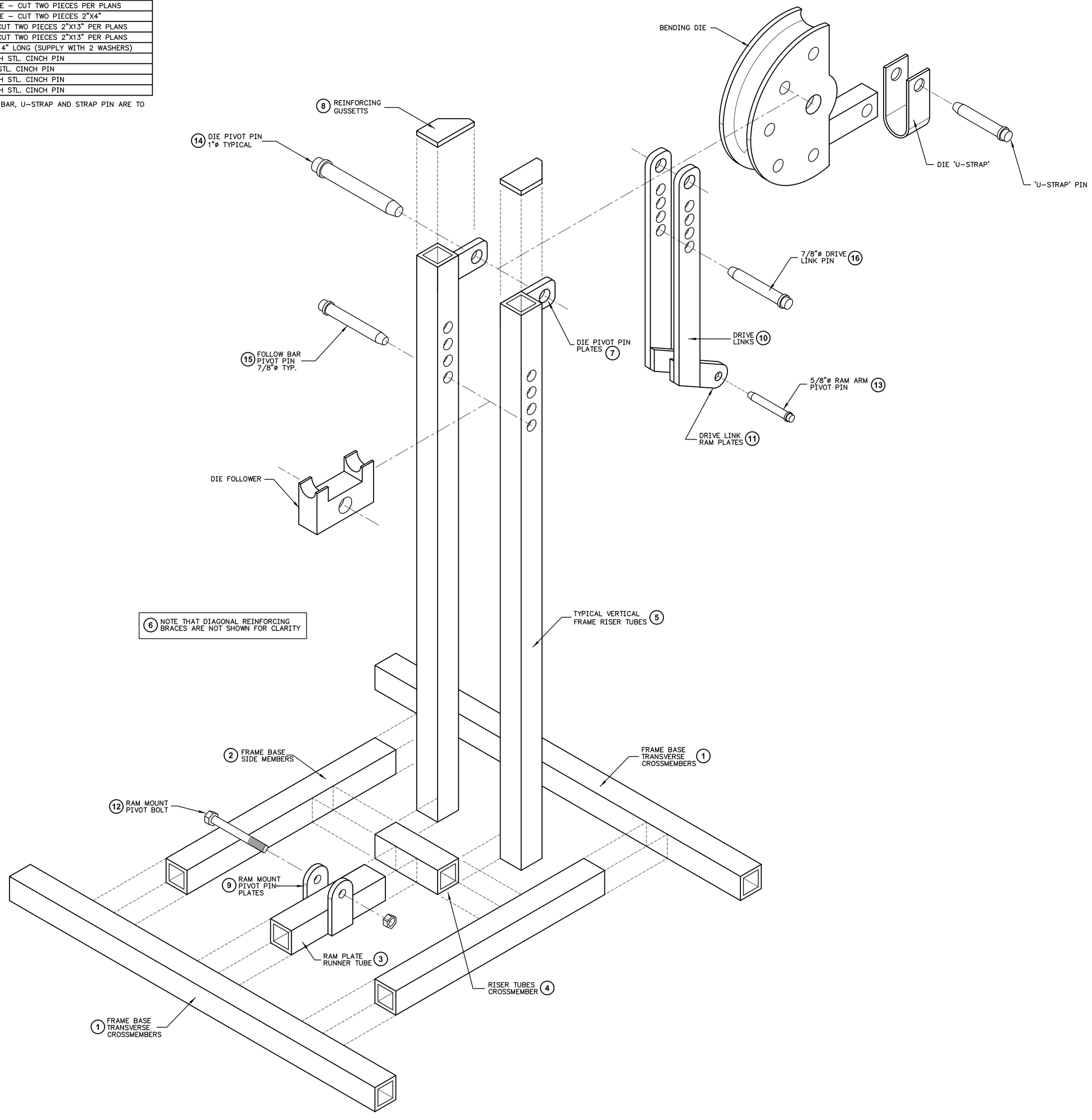

ASSEMBLY EXPLODED VIEW ISOMETRIC

NOT TO SCALE

GENERAL NOTES

KEEP IN MIND THAT THERE ARE SEVERAL DIFFERENT WAYS TO BUILD THE LOWER BASE LEG ASSEMBLY SO THESE SHEETS SHOW JUST ONE METHOD THAT I FOUND EASY TO DO. DON'T BE TO CONSTRAINED BY THE PLANS AS YOU MAKE THIS BENDER AS THERE ARE ALTERNATIVE WAYS OF BUILDING JUST ABOUT EVERY PART. THESE DRAWINGS ARE PRIMARILY INTENDED TO BE A REFERENCE BASELINE FOR OTHER PEOPLE TO START WITH ON THEIR OWN UNIQUE PROJECT.

THIS BENDER HAS A BENDING RANGE OF 3/4"ø TUBING AT A 3" CENTERLINE RADIUS UP TO A MAXIMUM OF 2"ø BY .25" WALL TUBING WITH A 6" CENTERLINE RADIUS.

THIS BENDER IS DESIGNED TO USE JD2 MODEL 3 DIE SETS.

THERE IS A SHORT ARTICLE WE POSTED THAT SHOULD BE READ BEFORE YOU START BUILDING THE BENDER SO IF YOU JUST FOUND THE PLANS ON THE INTERNET YOU REALLY DO NEED TO READ THE TEXT DOCUMENT. IT IS LOCATED AT:

http://chopperhandbook.com/bender5.htm

THIS BENDER PROJECT IS A WORK IN PROGRESS AND WE'LL BE ALTERING AND IMPROVING THE DESIGN AS TIME PERMITS SO BE SURE THAT YOU HAVE DOWNLOADED THE LATEST PLANS WE'VE POSTED ON THE MAIN WEBSITE.

GARY W. WEISHAUPT

PERFORMANCE ENGINEERING
CHASSIS FABRICATION
FLOWBENCH TESTING
MACHINE WORK
RESTORATIONS

231 W. FM 544, UNIT A110
MURPHY, TX 75094
Shop 972–881–7378
Cell 214–734–0200
email: gww250@yahoo.com

Revision	Date
• INITIAL LAYOUT	3–18–11
• GENERAL REVISION	6–21–12
•	
•	
•	
•	
•	
•	
•	
•	
•	
•	

Key Plan

Project Title

AIR/HYDRAULIC VERTICAL MOUNT TUBING BENDER

Drawn By	GWW
Date	6–21–12
Checked By	HC
Date	6–21–12
Scale	NOT TO SCALE
File No.	–
Project No.	–

Sheet Description

EXPLODED VIEW ASSEMBLY ISOMETRIC

PRELIMINARY PRINT

Sheet No.

VTB1.1